DocuSign Envelope ID: 90CA573C-A947-4DCB-A157-F8C379D0DA9B

PROJECT REFERENCE NO.	SHEET NO.
R-5843	SIG. 3.0

RAILROAD PREEMPTION PROGRAMMING DETAIL

(program controller as shown below)

From Main Menu press 'A' (Preemption), then '1' (Standard Preemptions).

```
   PREEMPTION  #1  SETTINGS (NEXT:1-10)
INTERVAL/TIMING  |  CLEAR/DWELL PHASES
  GRN YEL  RED   |123456789101112131415 16
1 255  0.0  0.0  |         X
2   0  0.0  0.0  |
3   0  0.0  0.0  |
4   0  0.0  0.0  |
5   1  0.0  0.0  | X   X
EXIT CALLS       |
            OPTIONS
PRIORITY (Y/N TO SELECT) ............HIGH
DELAY TIMER (0-255 SEC) .............0
MIN GREEN BEFORE PRE (0= DEFAULT)....1
PED CLEAR BEFORE PRE (0= DEFAULT)....0
YELLOW CLEAR BEFORE PRE (0= DEFAULT).0.0
RED CLEAR BEFORE PRE (0= DEFAULT)....0.0
DWELL MIN TIMER (0-255 SEC) .........7
DWELL MAX TIMER (0=OFF,1-255MIN) ....0
DWELL HOLD-OVER TIMER (0-255) .......0
LATCH CALL? .........................N
LINK TO NEXT PREEMPT? ...............N
ENABLE BACKUP PROTECTION? ...........N
HOLD CLEAR 1 PHASES DURING DELAY? ...N
FAST GREEN FLASH DWELL PHASES? ......N
PED CLEARANCE THROUGH YELLOW? .......Y
INHIBIT OVERLAP GREEN EXTENSION? ....N
SERVICE DURING SOFTWARE FLASH? ......N
REST IN RED DURING DWELL INTERVAL? ..Y
FLASH DWELL INTERVAL? ...............N
ALLOW PEDS IN DWELL INTERVAL? .......Y
RE-TIME DWELL INTERVAL? .............N
OVERLAPS:                 | ABCDEFGHIJKLMNOP
DWELL INT FLASH YELLOW    |
OMIT OVERLAPS:            |                X
```

PREEMPT 1 AC ISOLATOR (MODEL 252) OUTPUT PROGRAMMING DETAIL

(set DIP switches as shown below)

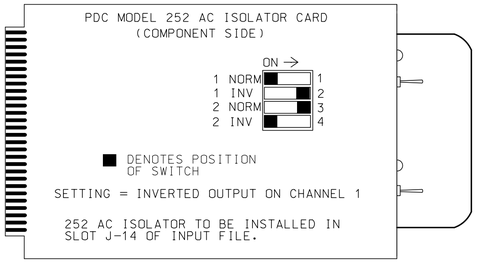

NOTE: IF ANOTHER MANUFACTURER TYPE OF AC ISOLATOR IS USED, OUTPUT PROGRAMMING IS LIKELY NOT TO EQUATE TO THAT SHOWN ABOVE.

PREEMPT ONLY PHASE OMIT NOTE

(program controller as shown below)

From Main Menu press '2' (Phase Control). Then '1' (Phase Control Functions). Program Phase 9 for 'Omit Phase' and Phases 2, 4, 6 and 8 for 'Startup Calls'. This is to prevent Phase 9 from being served when not in Preempt.

RAILROAD PREEMPTION WIRING DETAIL

(wire as shown below)

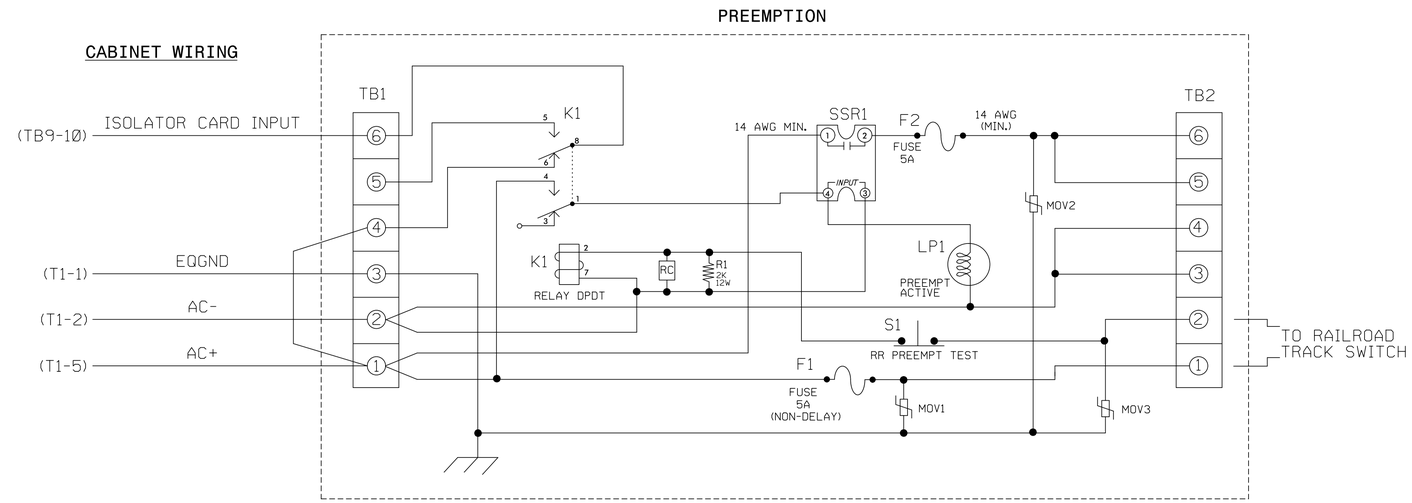

NOTES

1. Relay K1 is shown in the energized (Preempt not active) normal operation state.
2. Relay K1 is a DPDT with 120VAC coil with octal base.
3. Relay SSR1 is a SPST (normally open) Solid State Relay with AC input and AC (25 amp) output.
4. AC Isolator Card shall activate preemption upon removal of AC+ from the input (as shown above). To accomplish this set invert dip switch on AC Isolator Card.
5. IMPORTANT!! A jumper must be added between input file terminals J14-E and J14-K if not already present. Also, terminal TB9-12 (on input panel) shall be connected to AC neutral (jumper may have to be added).

FRONT VIEW

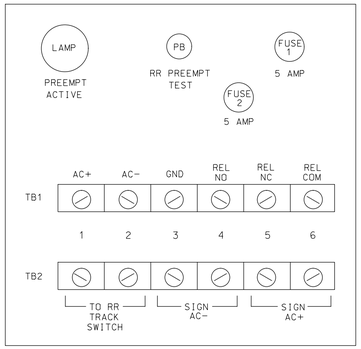

OVERLAP PROGRAMMING DETAIL

(program controller as shown below)

FROM MAIN MENU PRESS '8' (OVERLAPS), THEN '1' (VEHICLE OVERLAP SETTINGS).

PRESS '-' ONCE

```
 PAGE 1: VEHICLE OVERLAP 'P' SETTINGS
 PHASE:            |123456789101112131415 16
VEH OVL PARENTS:   | X X X X
VEH OVL NOT VEH:   |
VEH OVL NOT PED:   |
VEH OVL GRN EXT:   |
STARTUP COLOR: _ RED   _ YELLOW   _ GREEN
FLASH COLORS:  _ RED   _ YELLOW   _ GREEN
SELECT VEHICLE OVERLAP OPTIONS:   (Y/N)
FLASH YELLOW IN CONTROLLER FLASH?...N
GREEN EXTENSION (0-255 SEC).........0
YELLOW CLEAR (0=PARENT,3-25.5 SEC)..0.0
RED CLEAR (0=PARENT,0.1-25.5 SEC)...0.0
OUTPUT AS PHASE # (0=NONE, 1-16)....0
```

OVERLAP PROGRAMMING COMPLETE

NC Dept of Transportation
Division of Highways
Final Drawing Date: 1/25/2019
DocuSigned by: R. N. Zisan
Traffic Engineer
ITS & Signals Unit

THIS ELECTRICAL DETAIL IS FOR
THE SIGNAL DESIGN: 14-1306
DESIGNED: JUNE 2018
SEALED: 1/18/2018
REVISED:

New Installation - Electrical Detail - Sheet 2 of 3

DOCUMENT NOT CONSIDERED FINAL UNLESS ALL SIGNATURES COMPLETED

ELECTRICAL AND PROGRAMMING DETAILS FOR:

Prepared For: NC Transportation Mobility and Safety Division, Traffic Engineering Branch, ITS & Signals Management Section, DEPARTMENT OF TRANSPORTATION, STATE OF NORTH CAROLINA
750 N.Greenfield Pkwy,Garner,NC 27529

EVERETT STREET AT SR 1336 (DEPOT STREET)

DIVISION 14 SWAIN COUNTY BRYSON CITY

PLAN DATE:	JUNE 2018	REVIEWED BY:	SL PHILLIPS
PREPARED BY:	SP PENNINGTON	REVIEWED BY:	

REVISIONS	INIT.	DATE

SEAL: NORTH CAROLINA PROFESSIONAL SEAL 032607 ENGINEER STACIE L. PHILLIPS

DocuSigned by: 1/18/2019
SIGNATURE DATE

SIG. INVENTORY NO. 14-1306

PLANS PREPARED IN THE OFFICE OF:
Kimley»Horn
NC License #F-0102
421 Fayetteville Street, Suite 600
Raleigh, NC 27601
(919) 677-2000

1/17/2019 12:01:01 PM susan.pennington K:\RAL_Roadway\R01103638? - Div 14 (R-5843 Bryson Int\Traffic Signal\S4 - Signal Design\14-1306_2018e2.dgn